TYPE	YEAR	PROJECT NO.	SHEET NO.
R.O.W.	2015	HSIP-247(12)	2A

TENNESSEE D.O.T.
DESIGN DIVISION
FILE NO.

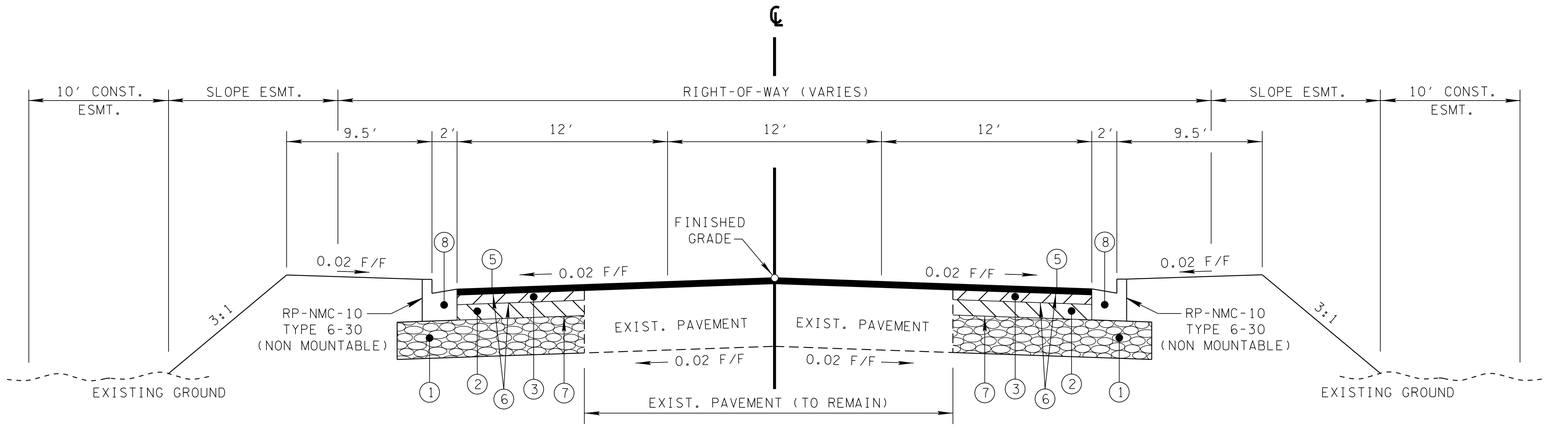

TANGENT SECTION

(BASED ON STD. DWG. RD01-TS-6A)

S.R. 247 (BEECHCROFT RD.)

STA. 17+64.00 TO STA. 18+45.00
STA. 21+55.00 TO STA. 23+00.00

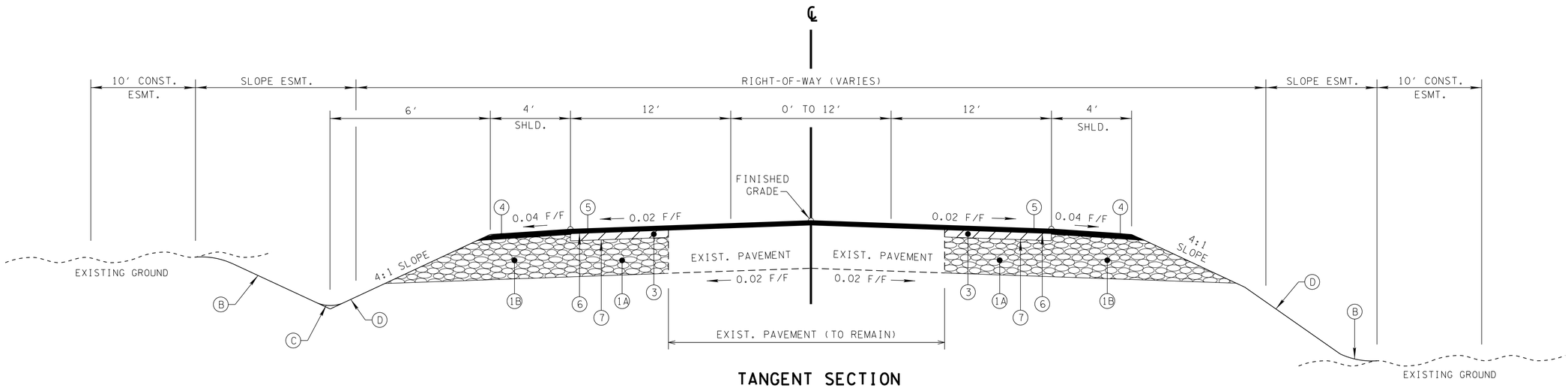

TANGENT SECTION

(BASED ON STD. DWG. RD01-TS-2)

CLEBURNE ROAD

STA. 20+00.00 TO STA. 24+25.00

BUSINESS

SURFACE - 1¼"
BINDER - 1¾"
BASE - 4"

FIELD OR RESIDENTIAL

SURFACE - 1½"
BINDER - NONE
BASE - 4"

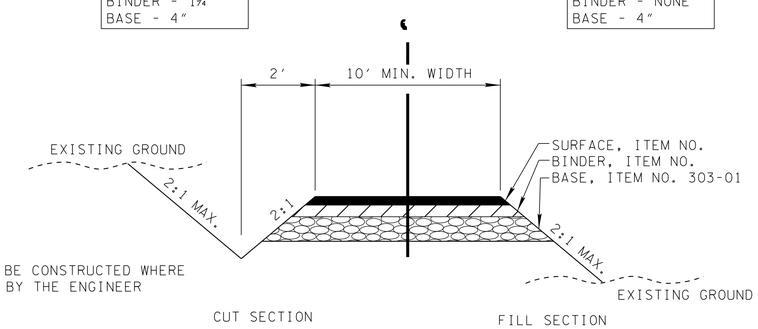

NOTE: DITCH TO BE CONSTRUCTED WHERE DIRECTED BY THE ENGINEER

TYPICAL SECTION

PRIVATE DRIVE TO BUSINESS, FIELD, OR RESIDENTIAL PROPERTY

ROADWAY SLOPE STABILIZATION NOTES
ITEM NO. 803-01, (NEW SOD) SHALL BE USED ON ALL SLOPES.

(A) THE SLOPES OF THE SHOULDER AND ROADWAY PAVEMENT SHALL NOT EXCEED AN ALGEBRAIC DIFFERENCE OF 0.07.

(B) SEE STANDARD DRAWING RD-S-11 FOR FILL AND CUT SLOPE TABLES, ROUNDING ON TOP OF CUT SLOPES AND TOE OF FILL SLOPES AND SPECIAL ROCK CUT.

(C) SEE STANDARD DRAWING RD-S-11A FOR ROUNDING OF ROADSIDE DITCH SLOPES.

(D) SEE STANDARD DRAWING RD-S-11 (CASE II) FOR DESIRABLE SLOPES & NOTE REGARDING GEOLOGICAL RECOMMENDATIONS.

* SLOPES VARIES (SEE CROSS SECTIONS)

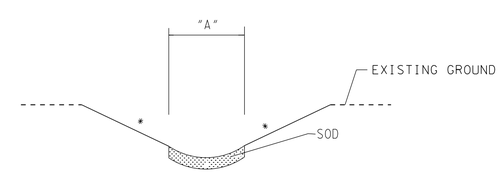

TYPICAL GEOMEMBRANE LINED SOD DITCH

ROAD NAME		FROM STA.		TO STA.	LT/RT
BEECHCROFT	STA	11+50.00	STA	12+50.00	RT

SEALED BY

STATE OF TENNESSEE
DEPARTMENT OF TRANSPORTATION

TYPICAL SECTIONS

04-AUG-2016 13:47
\\JJ03WF01.tdot.state.tn.us\03Shared\SURVEY\DESIGN\PIN 117319.01Maury Co. SR-247 RSAR at Cleburne Rd\Design Files\117319-01-ROW-Rev-03-08-16\117319-01-ROW-Rev-03-08-16\MUSR247RSAR02.sht.DGN